Technical sheet :

100 VJR

Capacities		Metric
Working height	h21	9.90 m
Platform height	h7	7.90 m
Maximum outreach		3.10 m
Overhang		6.56 m
Pendular arm rotation (top / bottom)		+58 ° / -56 °
Platform capacity	Q	200 kg
Turret rotation		350 °
Number of people (indoor / outdoor)		2 / 1
Weight and dimensions		
Platform weight*		2820 kg
Platform dimensions (length x width)	lp / ep	1.19 m x 0.93 m
Floor height (access)	h20	0.46 m
Overall length	l1	2.80 m
Overall width	b1	0.99 m
Overall height	h17	1.99 m
Jib length	l13	1.45 m
Counterweight offset (turret at 90°)	a7	0.09 m
External turning radius	Wa3	2.02 m
Ground clearance under pothole protection	m6	0.03 m
Ground clearance at centre of wheelbase	m2	0.09 m
Wheelbase	y	1.20 m
Performances		
Drive speed - stowed		5 km/h
Drive speed - raised		0.65 km/h
Gradeability		25 %
Permissible leveling		2 °
Wheels		
Tires type		Solid non-marking tires
Standard tires		16.5-11 1/4 / 406 x 127 mm
Drive wheels (front / rear)		0 / 2
Steering wheels (front / rear)		2 / 0
Braking wheels (front / rear)		0 / 2
Engine/Battery		
Drive motor power rating		2 x 0.77 kW
Lift motor power		3 kW
Number of hydraulic pump / Capacity of hydraulic pump		2 x 3.75 cm³
Battery voltage		24 V
Battery capacity		250 Ah
On-board charger (V / A)		24 V / 30 A
Miscellaneous		
Number of cycles with STD Battery (HIRD)		29
Ground Pressure		11.80 dan/cm2
Hydraulic Pressure		140 bar
Hydraulic tank capacity		22 l
Vibration on hands/arms		< 0.50 m/s²
Standards compliance		
This machine is in compliance with:		European directives: 2006/42/EC- Machinery (revised EN280-1:2022) - 2004/108/EC (EMC) - EMC according to EN 12895 / 2015 +A1 / 2019

*Varies according to options and standards of the country to which the machine is delivered

100 VJR - Load chart

Load Chart for MEWP Metric

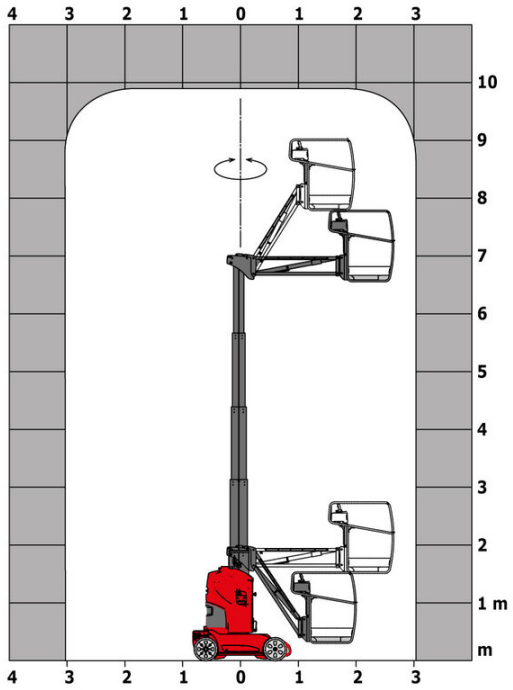

100 VJR - Dimensional drawing

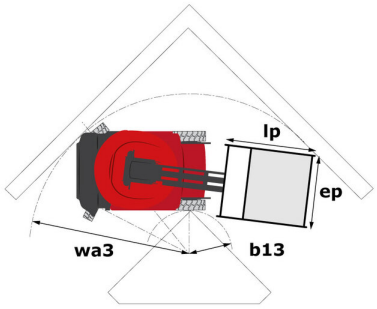

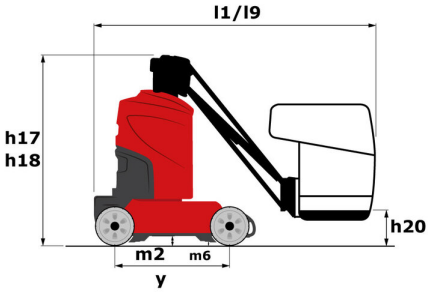

Equipment

Standard
Audible alarm and illuminated indicator lamp (leveling, overload, lowering)
CAN bus technology
Easy Link with 2 year Service
Emergency stop button in platform and on frame
Fixed pothole protection
Fork pockets
Horn in the platform
Manual emergency lowering
Multi-function smartview display
Multi-voltage integrated charger
Negative-type braking on rear wheels
Non-marking rubber tyres
Pendular arm
Platform with open-work floor
Proportional controls
Secondary Protection System (SPS)
Slinging and securing rings
Tool box in platform
Traction battery

Optional
110 or 230V plug with differential circuit breaker
Audio warning on all motion
Audio warning on descent
Audio warning on movement
Basket with hinged doors
Biodegradable hydraulic oil - Grade 32
Centralized filling of the battery
Cold weather protection oil
Easy Link - With access control keypad
Easy link with remote lock
LED amber strobe light on the basket
LED strobe light on the turret
Maintenance-free battery
Personalized paintwork
Pre fitting electric supply IP65
Protective cover for control panel
Safety harness reminder indicator
Safety kit - Harness + helmet
Turret orientation information
Working light (x1) on basket

Head Office
B.P. 249 - 430 rue de l'Aubinière
44150 Ancenis Cedex - France
Tel: +33 (0)2 40 09 10 11 - Fax: +33 (0)2 40 09 10 97
www.manitou.com

This publication provides a description of the configuration versions and options for Manitou products, which may differ for equipment. The equipment presented in this brochure may be part of a series, as an option, or it may not be available, depending on the versions. Manitou reserves the right, at any time and without notice, to amend the specifications described and represented. The specifications provided do not bind the manufacturer. For more details, please contact your Manitou agent. This is not a contractually binding document. The presentation of the products is not contractually binding. List of specifications non-exhaustive. The logos as well as the visual identity of the company are owned by Manitou and cannot be used without authorisation. All rights reserved. The photos and diagrams contained in this brochure are only provided for consultation and information purposes.
MANITOU BF SA - Limited company with board of directors - Share capital: 39,668,399 euros - 857 802 508 RCS Nantes