Technical sheet :

CT 50

MANITOU
HANDLING YOUR WORLD

	Technical characteristics		Metric
1.1	Manufacturer		Manitou
1.2	Model Name		CT 50
1.3	Power source		Battery
1.4	Operator type		Carried
1.5	Max. capacity	Q	5000 kg
1.7	Rated drawbar pull	F	150 kg
1.9	Wheelbase	y	1109 mm
	Weight		
2.1	Service weight		1270 kg
2.3	Axle loading unladen (front / rear)		800 kg / 470 kg
	Wheels		
3.1	Tyres type		Bandage
3.2	Dimensions of front wheels		254 x 100
3.3	Dimensions of rear wheels		250 x 75
3.4	Additional wheels (dimensions)		140 x 40
3.5	Number of front wheels / rear wheels		2 / 2
3.5.2	Drive wheels (front / rear)		1 / 0
3.6	Front wheel gauge	b10	581 mm
3.7	Rear wheel gauge	b11	633 mm
	Dimensions		
4.8	Platform height	h7	128 mm
4.9	Height tiller up max.*	h14	1212 mm
4.12	Height of towing bar (coupling height)	h10	220 mm
4.17	Coupling distance to rear axle	l5	255 mm
4.19	Overall length	l1	1551 mm
4.21	Overall width	b1	800 mm
4.32	Ground clearance at centre of wheelbase	m2	50 mm
4.35	Turning radius	Wa	1332 mm
	Performances		
5.1	Travel speed (laden / unladen)		8 km/h / 12 km/h
5.8	Max Gradeability (laden / unladen)		4 % / 13 %
5.10	Service brake		Electro magnetic
5.11	Parking brake		Butterfly switch release
	Engine		
6.1	Drive motor rating S2 60 min		2 kW
6.3	Battery according to DIN 43531/35/36 A, B, C		Traction
6.4	Battery / Batteries capacity		24 V / 465 Ah
6.5	Battery weight (+/- 5%)		460 kg
	Miscellaneous		
8.1	Type of drive control		Mosfet AC speed controller
8.4	Sound level at the driver's ear according to DIN 12 053		66 dB(A)

CT 50 - Dimensional drawing

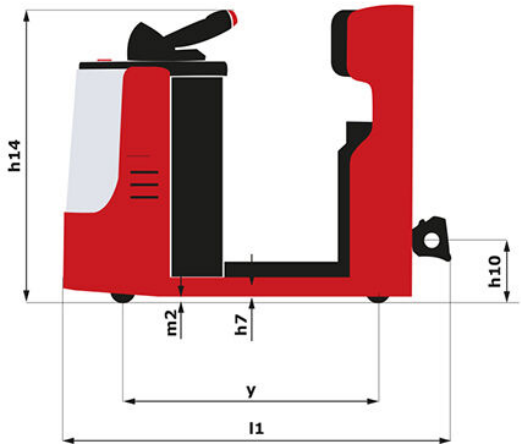

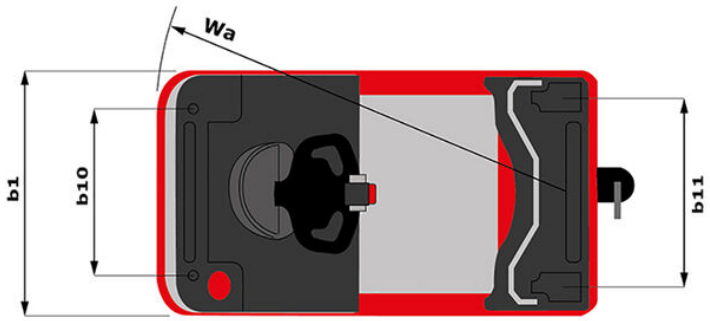

Coupling

Coupling ball

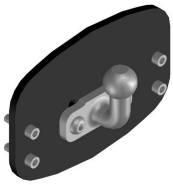

Coupling Hook

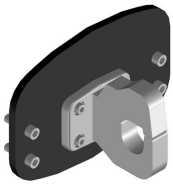

Remoted manual coupling pin

Manual coupling pin

Coupling ball with hydraulic lifting

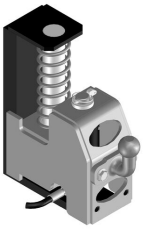

Siège Social
430 rue de l'Aubinière - 44150 Ancenis Cedex - France
Tel: +33(0)2 40 09 10 11 - Fax: +33 (0)2 40 09 10 97
www.manitou.com

This brochure describes versions and configuration options for Manitou products which may be fitted with different equipment. The equipment described in this brochure may be standard, optional or not available depending on version. Manitou reserves the right to change the specifications shown and described at any time and without prior warning. The manufacturer is not liable for the specifications given. For more information, contact your Manitou dealer. Non-contractual document. Product descriptions may differ from actual products. List of specifications is not comprehensive. The logos and visual identity of the company are the property of Manitou and may not be used without authorisation. All rights reserved. The photos and diagrams contained in thisbrochure are provided for information only.
MANITOU BF SA - Limited company with board of directors - Share capital: 39,668,399 euros - 857 802 508 RCS Nantes